SECTION 5. CABINET ASSEMBLY

***Warning* - Always shut off electrical power to the unit before beginning any service repair procedures.**

DOOR ASSEMBLY & HINGES

The door assembly is reversible. It contains an inertial vibration damper comprised of a steel plate suspended with springs. The damper is designed to tune out excessive vibrations generated by the machine during the spin cycle. Replacement inner door liners are shipped with the vibration damper in place.

REMOVAL

1. Open the door and remove the center screw of each hinge secured to the inner flange of the front panel in the door opening.

2. Grasp the door with both hands and lift the hinge area slightly. Draw the door assembly away from the machine. This will disengage the hinges from the slots in the front shroud ***(Figure 5-1).*** If the hinges bind, press out on the plastic shroud near the hinge toward the cabinet.

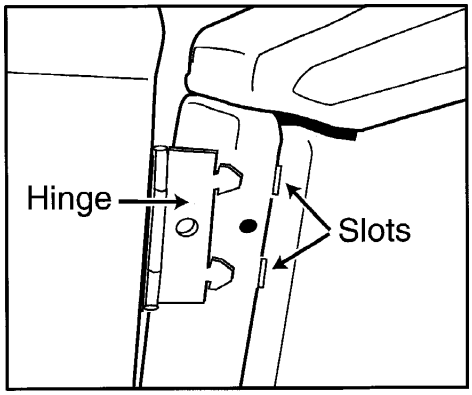

Figure 5-1

REVERSAL

1. Repeat the above steps and, remove the corresponding sheet metal spacers on the opposite side.

2. Remove the hinges from the door and relocate them to the other side of the door.

3. Remount the door into the new slots and secure with one screw into each hinge.

4. Mount the sheet metal spacers onto the side where the hinges were previously to cover the hinge slots in the front shroud.

DISASSEMBLY

1. Remove ten screws located across the bottom and along either side of the door panel. The top edge of the outer panel is folded over the inner door plug.

2. With the outer door panel removed, the stabilizer is exposed and is attached to the inner door plug.

© 1998 Maytag Corporation
For more help, see Samurai Appliance Repair Man at www.FixitNow.com

Cabinet Vibration Absorber

The purpose of the cabinet vibration absorber is to provide a dampening effect to the washer during the spin cycle. By dampening the machine vibration, the washer is able to maintain and achieve optimum spin performance. The stabilizer is attached to the inner door plug with two screws.

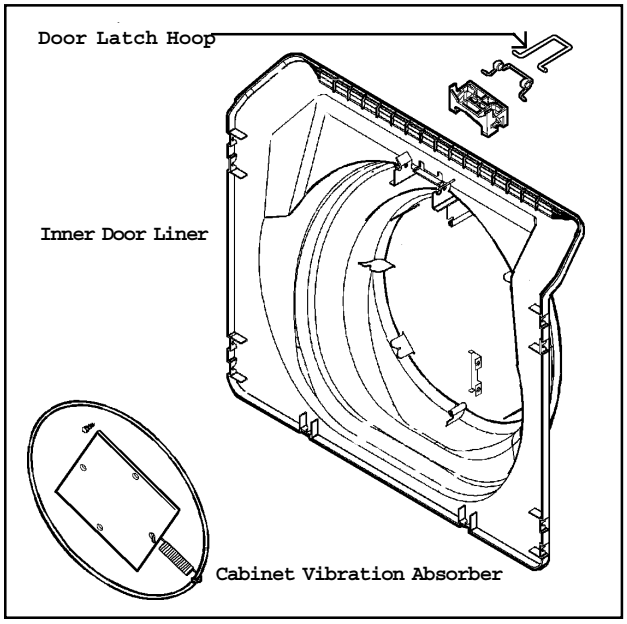

Figure 5-2

Door Latch Hoop

The door latch hoop is snapped into the door liner. A spring retains the hoop in the proper position to align with the door lock mechanism when the door is closed. A plastic support is snapped into place over the latch hoop at add strength ***(Figure 5-2).***

FRONT PANEL

REMOVAL

1. **Disconnect power to the unit.**

2. Open the door and remove the four screws along the inside lip of the door opening. The two that are located vertically, on either side of the door opening, secure the front panel to the front shroud assembly ***(Figure 5-3).*** Care should be taken when opening and closing the door with the screws removed.

3. Remove the door.

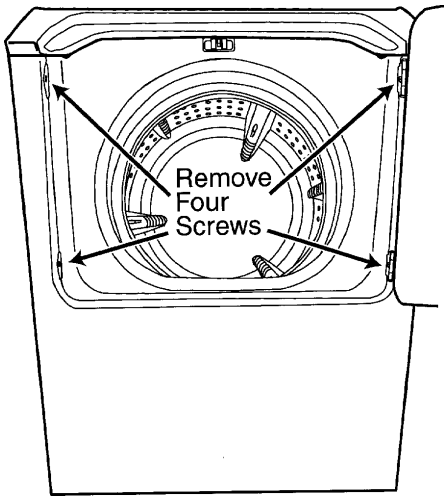

Figure 5-3

4. To remove the front panel, open the door, twist the upper right and left panel extensions inward by pressing in on the outer upper edges of the front panel posts. This will disengage the front panel posts from clips located on the face of the cabinet flange ***(Figure 5-4).***

5. Tilt the top of the front panel away from the washer. Then, remove the front panel ***(Figure 5-4).***

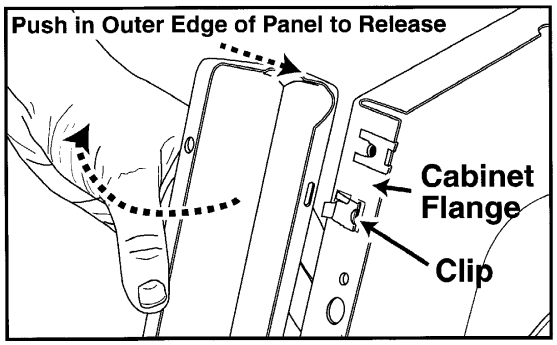

Figure 5-4

© 1998 Maytag Corporation
For more help, see Samurai Appliance Repair Man at www.FixitNow.com

TOP COVER

REMOVAL

1. Remove the front panel ***(See Front Panel Removal)***.

2. Remove the four screws fastening the dispenser bezel to the top of the top cover ***(See Dispenser Assembly)***.

3. Remove two 5/16" hex head screws securing the two hold down brackets on the top cover ***(Figure 5-5)***.

4. To remove the hold down brackets, swing the bracket to the outside to unhook the bracket from the slot in the top cover lip ***(Figure 5-6)***.

5. If the door is still positioned on the front shroud, open the door prior to lifting the front of the top cover and tilt the top cover toward the rear of the machine.

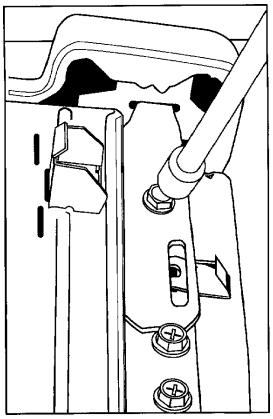

Figure 5-5

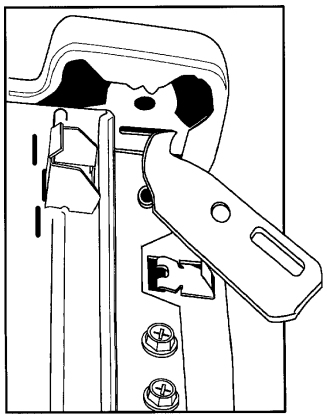

Figure 5-6

DOOR LOCK MECHANISM

The purpose of the door lock mechanism is to secure the door during the spin cycle. When the door is shut, the wire loop on the door engages the rotating gear in the door lock mechanism ***(Figure 5-7)***. When the proper water level is reached and the pressure switch is satisfied, 120 VAC is applied to the wax motor. The piston in the wax motor will extend, pushing the latch axle and sliding gear from left to right. Teeth on the face of the sliding gear will intermesh with the teeth on the side of the rotating gear (normally takes about 45-60 seconds). This interlocking of teeth provides the locking action of the lock mechanism.

At the end of the spin cycle, when tumbler speed drops below 90 RPM, voltage is no longer applied to the wax motor. The wax motor will cool and relax the piston on the wax motor. The latch axle and sliding gear are then pulled from right to left, disengaging the teeth of the sliding gear from the rotating gear (normally takes 1 - 1½ minutes). This allows the rotating gear to be in a position to rotate if necessary, should the door be opened.

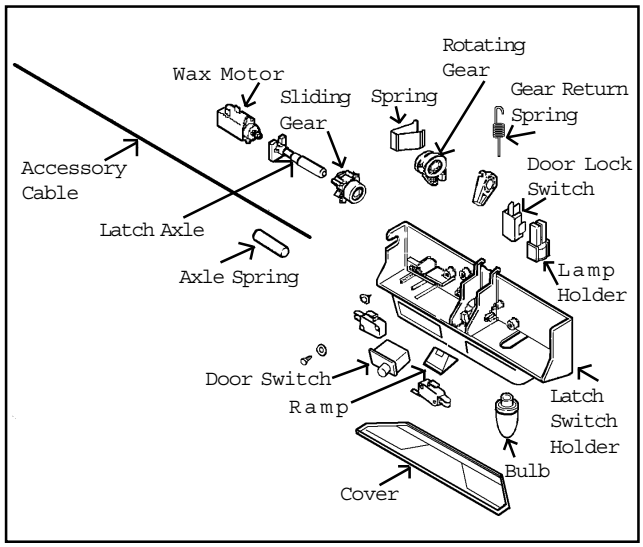

Figure 5-7

© 1998 Maytag Corporation
For more help, see Samurai Appliance Repair Man at www.FixitNow.com

Two switches in the door lock mechanism inform the machine microprocessor control when the door is latched shut and when the door is securely locked. For more information, refer to section on ***Electrical-Mechanical Troubleshooting.***

An emergency access cord (filament) is attached to the sliding gear, should the wax motor fail in the extended position and entry into the washer is necessary. To gain access to the cable, removal of the dispenser bezel is necessary. Once removed, the cable is exposed. By carefully applying both a steady pull of the access cord and opening force to the door, the wax motor is overridden and the sliding gear is pulled from right to left away from engagement with the rotating gear. Thus, allowing the rotating gear to release the wire loop of the door.

NOTE: ***When the cord is released, the lock will return to a locked position (Figure 5-8).***

REMOVAL

1. Remove the front panel and raise the top cover to expose the door lock mechanism ***(See Front Panel & Top Cover).***

2. Remove the wires from the lock switches, wax motor and light fixture.

3. Remove light.

4. Remove two 5/16" hex-head screws securing the switch support to the metal shroud support ***(Figure 5-8).***

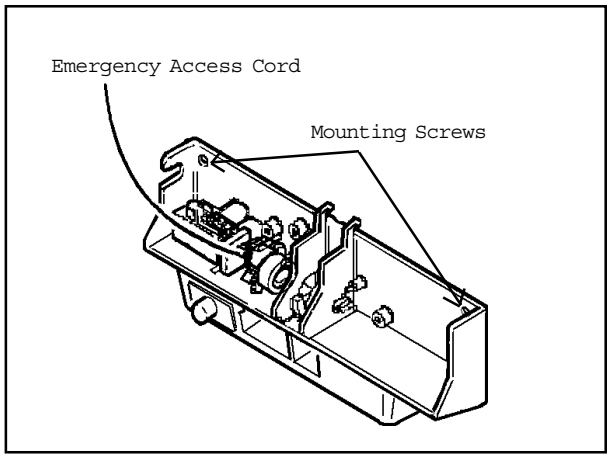

Figure 5-8

FRONT SHROUD ASSEMBLY

The shroud assembly ties the sides of the cabinet together across the front for stability and provides support for mounting of the door assembly, front panel and door lock mechanism. To gain access to components behind the front shroud, the assembly can be removed as a whole assembly and lifted onto the top of the washer. This will allow access to the tub cover, spin basket, sump area and etc..

REMOVAL

1. Remove the front panel and raise the top cover to expose the front shroud assembly ***(See Front Panel & Top Cover).***

2. With the door open, unsnap the boot gasket from around the inside perimeter of the door opening by pulling out on the sealing lip of the gasket ***(Figure 5-9).***

© 1998 Maytag Corporation
For more help, see Samurai Appliance Repair Man at www.FixitNow.com